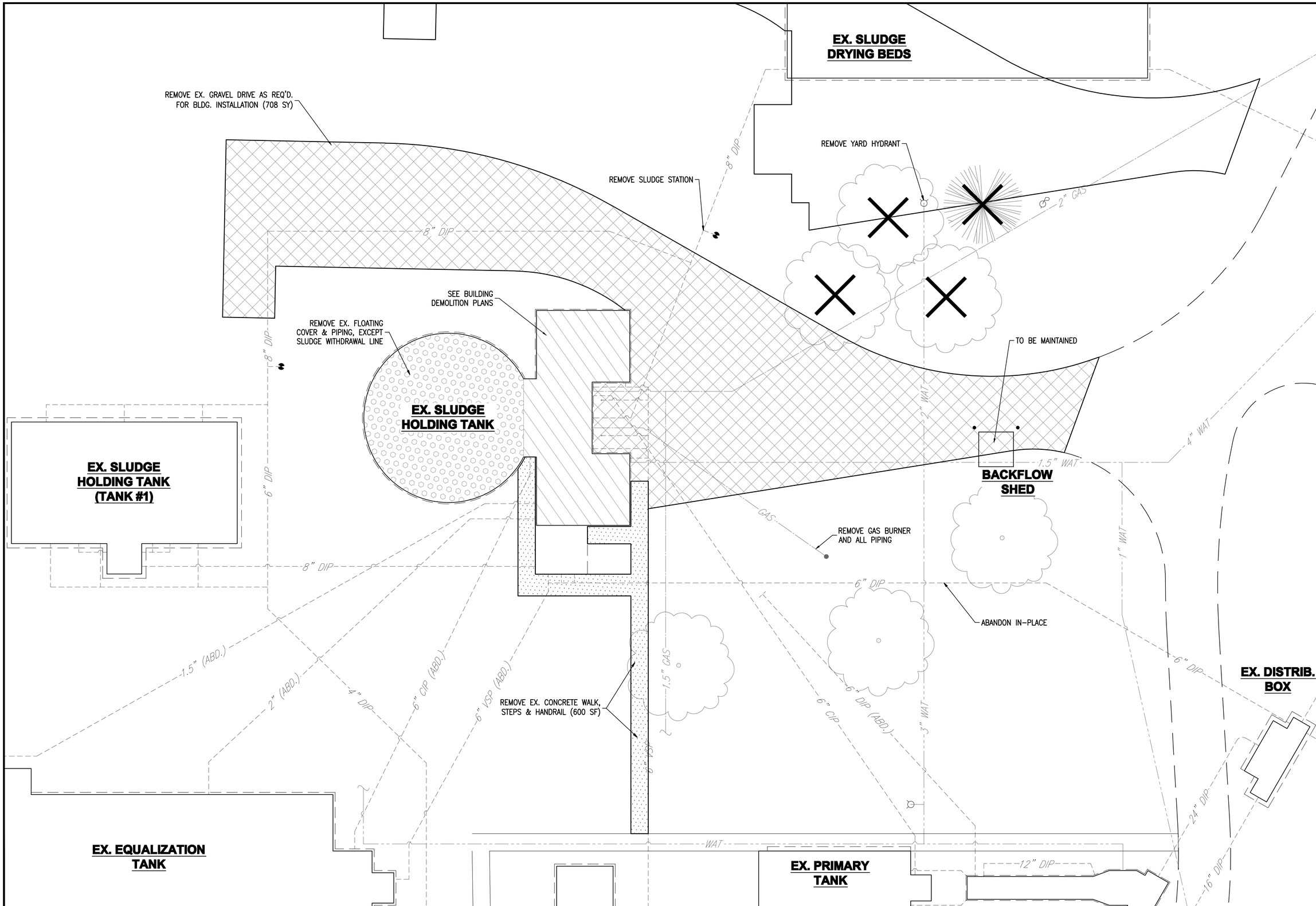

HORIZONTAL SCALE IN FEET
0 10 20

CALCULATED	CHECKED
TM	JS

REV. NO.	DATE
002	04/25/14

GLF Building engineers
3000 Dutch Ridge Rd., Ste. A
Ph: 440.951.0007
Fax: 440.951.0580
www.glfengineers.com

WASTEWATER TREATMENT PLANT IMPROVEMENT - PHASE I
SITE PLAN - DEMOLITION

VILLAGE OF CRESTLINE

3

NOTE:
CONCRETE SHALL BE PLACED IN & VIBRATED TO ELIMINATE ALL VOIDS IN CONC. IF VOIDS DO REMAIN, FILL WITH GROUT BEFORE INSTALLING PIPE & RUBBER SEALS. ALL EXTERIOR WALL AND FLOOR PENETRATIONS SHALL HAVE MODULAR MECHANICAL SEALS UNLESS OTHERWISE INDICATED.

MODULAR MECHANICAL SLEEVE DETAIL
NO SCALE

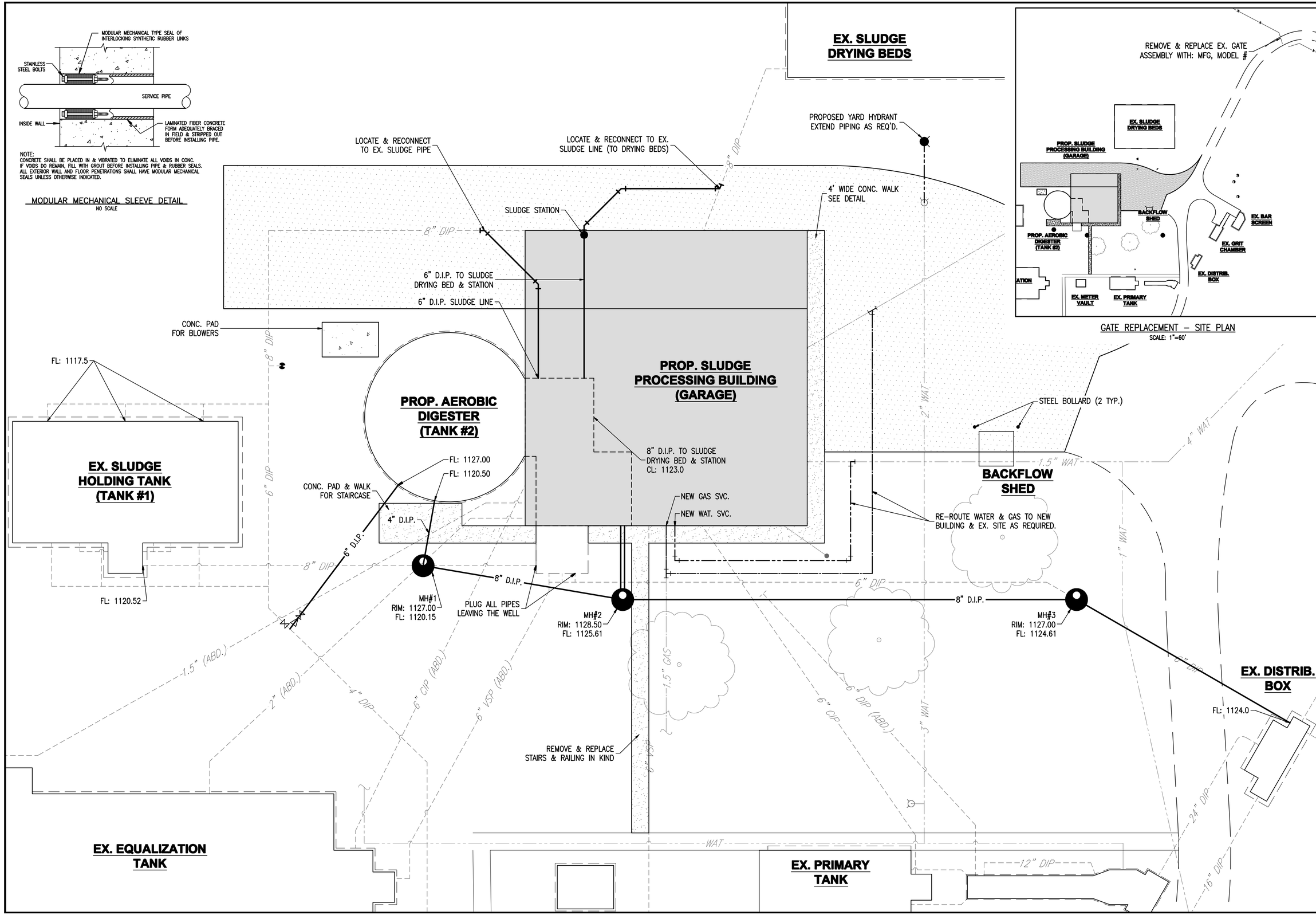

GATE REPLACEMENT – SITE PLAN
SCALE: 1"=60'

HORIZONTAL SCALE IN FEET
0 10 20

CALCULATED TM
CHECKED JS

REV. NO.	DATE
002	04/25/14

GJ Building engineers
3000 Dutch Ridge Rd. Ste. A
Ph: 443.321.1287
Fax: 443.321.0300
www.gjbuildingengineers.com

WASTEWATER TREATMENT PLANT IMPROVEMENT - PHASE I
SITE PLAN - PROPOSED

VILLAGE OF CRESTLINE

4

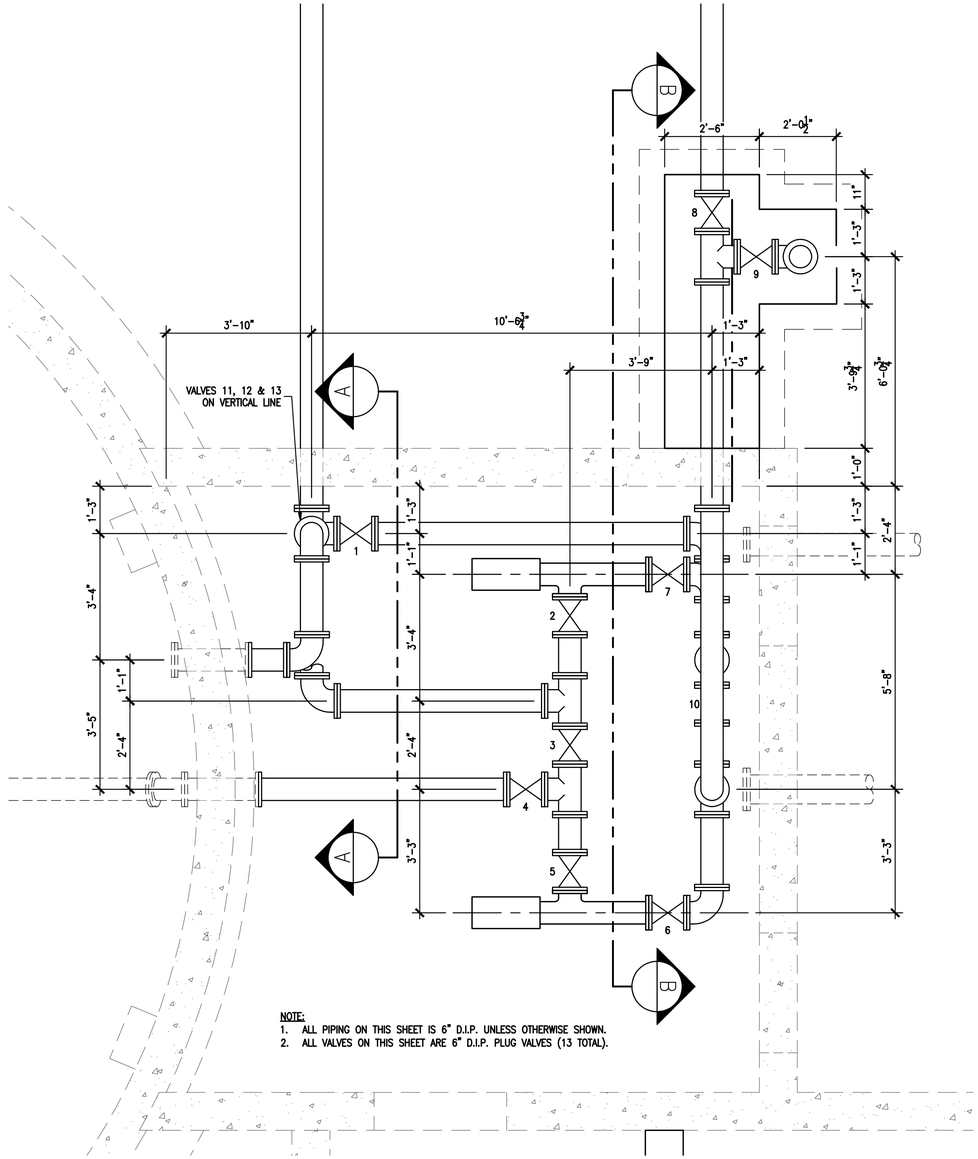

NOTE:
1. ALL PIPING ON THIS SHEET IS 6" D.I.P. UNLESS OTHERWISE SHOWN.
2. ALL VALVES ON THIS SHEET ARE 6" D.I.P. PLUG VALVES (13 TOTAL).

PUMP AREA ENLARGEMENT
SCALE: 1/2"=1'-0"

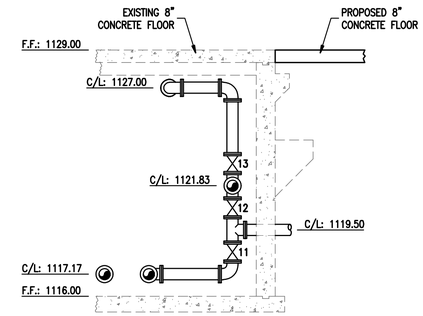

BASEMENT PIPING SECTION A–A
NOT TO SCALE

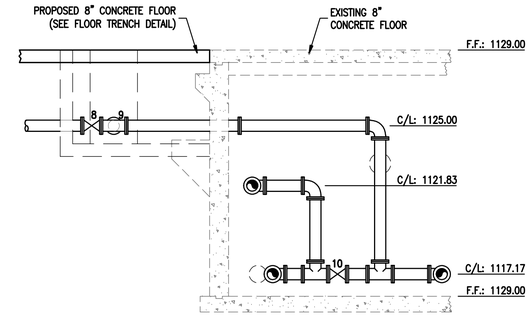

BASEMENT PIPING SECTION B–B
NOT TO SCALE

ROOM FINISH SCHEDULE

ROOM DATA #	NAME	FLOOR MAT'L.	FLOOR FINISH	WALLS FACE	WALLS MAT'L.	WALLS FINISH	WALLS INSUL.	WALLS FACE	WALLS MAT'L.	WALLS FINISH	WALLS INSUL.	WALLS FACE	WALLS MAT'L.	WALLS FINISH	WALLS INSUL.	CEILINGS FACE	CEILINGS MAT'L.	CEILINGS FINISH	CEILINGS INSUL.	REMARKS
201	STAIRWELL	CO	BSR	ALL	CB	PT										CO	PT	8'–1"		
202	UTILITY ROOM	CO	BSR	ALL	CB	PT										CO	PT	8'–1"		
203	PUMP ROOM	CO	BSR	ALL	CB	PT										CO	PT	8'–1"		

FINISH LEGEND

FLOORS – MATERIALS
CO: CONCRETE

WALLS – MATERIALS
GB: GYPSUM BOARD
GB2: GYPSUM BOARD ON 2x4 WOOD STUDS
GB3: GYPSUM BOARD ON METAL STUDS
GB4: GYPSUM BOARD ON 2x2 STRIPS
CB: CONCRETE BLOCK
CO: CONCRETE
WT: WOOD FRAME WITH TILE

CEILING – MATERIALS
SA: SUSPENDED ACOUSTIC CEILING, TYPE 1
GB: GYPSUM BOARD
CO: CONCRETE
WD: WOOD

INSULATION – MATERIALS
VP: VERMICULITE OR POLYURETHANE FOAM
RC: RIGID TYPE CEILING
RW: RIGID TYPE WALL
BL: BLANKET BATT TYPE

FLOORS – FINISHES
RT2: RUBBER FLOOR TILE, TYPE 2
FS: FLOOR SEALER
BSR: BREATHABLE SLIP RESISTANT FLOORING

WALLS – FINISHES
PT: PAINT
UF: UNFINISHED
ST: SEALED TILE

CEILING – FINISHES
PT: PAINT
UF: UNFINISHED

NOTE:
1. WALLS LISTED MORE THAN ONCE HAVE DIFFERENT CHARACTERISTICS AT DIFFERENT LOCATIONS ALONG THE WALL. CONSULT ENGINEER FOR EXPLANATION IF NECESSARY.
2. WALL AND CEILING PAINT SHALL BE WATER BASED TILE CLAD EPOXY (B73W00111) AS MANUFACTURED BY SHERWIN WILLIAMS OR APPROVED EQUAL.

CALCULATED	CHECKED
TM/JS	JS

REV. NO.	DATE
002	04/25/14

GJ consulting engineers
3200 Corlett Road
Shaker Heights, Ohio 44120
Ph: 440.838.1587
Fax: 440.838.0300
www.gjconsultingengineers.com

WASTEWATER TREATMENT PLANT IMPROVEMENTS - PHASE I
BUILDING PLAN - BASEMENT AREA DETAILS

VILLAGE OF CRESTLINE

12

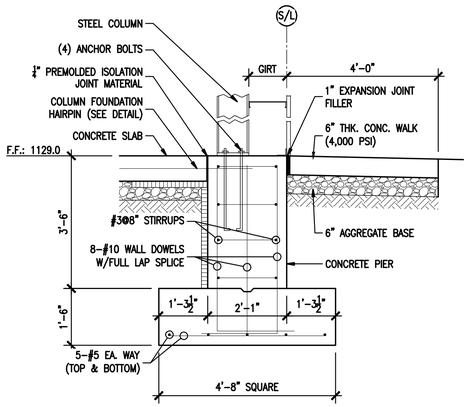

NOTES:
- ALL FOUNDATIONS TO BEAR ON COMPACTED, STRUCTURAL FILL, SEE FOUNDATION NOTE.

SECTION A-A
COLUMN TYPE 1 – PIER & FOUNDATION DETAIL
SCALE: 1/2"=1'-0"

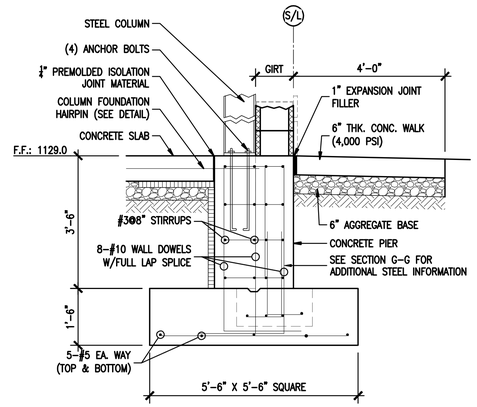

NOTES:
- ALL FOUNDATIONS TO BEAR ON COMPACTED, STRUCTURAL FILL, SEE FOUNDATION NOTE.

SECTION B-B
COLUMN TYPE 2 – PIER & FOUNDATION DETAIL
SCALE: 1/2"=1'-0"

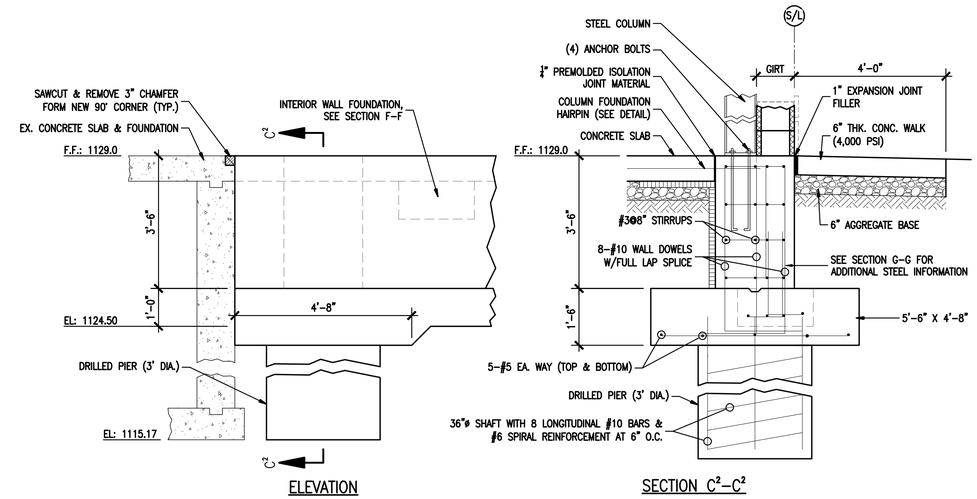

SECTION C-C
COLUMN TYPE 3 – PIER & FOUNDATION DETAIL
SCALE: 1/2"=1'-0"

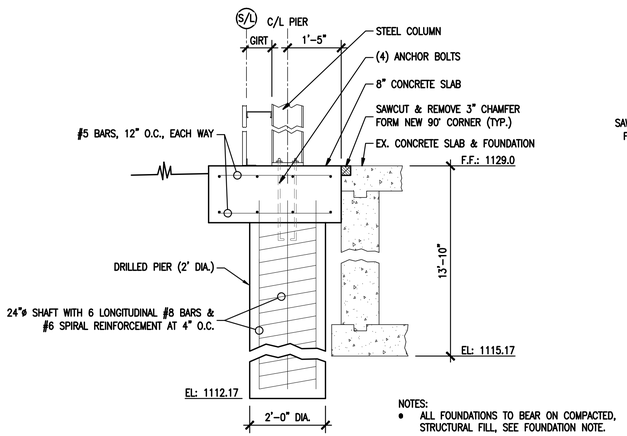

NOTES:
- ALL FOUNDATIONS TO BEAR ON COMPACTED, STRUCTURAL FILL, SEE FOUNDATION NOTE.

SECTION D-D
COLUMN TYPE 4 – PIER & FOUNDATION DETAIL
SCALE: 1/2"=1'-0"

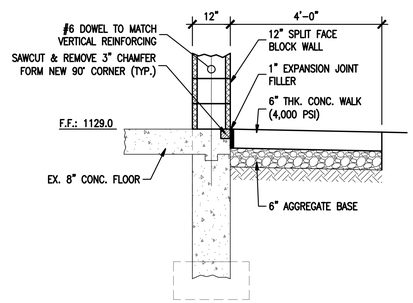

SECTION E-E
FOUNDATION SECTION 12" BLOCK
OVER EXISTING BASEMENT
SCALE: 1/2"=1'-0"

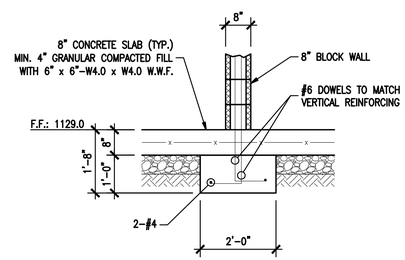

SECTION F-F
FOUNDATION SECTION UNDER 8" BLOCK
SCALE: 1/2"=1'-0"

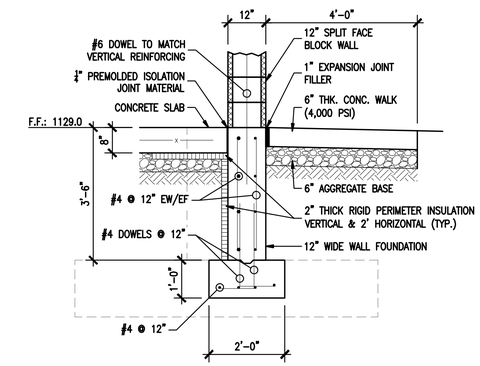

SECTION G-G
FOUNDATION SECTION UNDER 12" BLOCK
SCALE: 1/2"=1'-0"

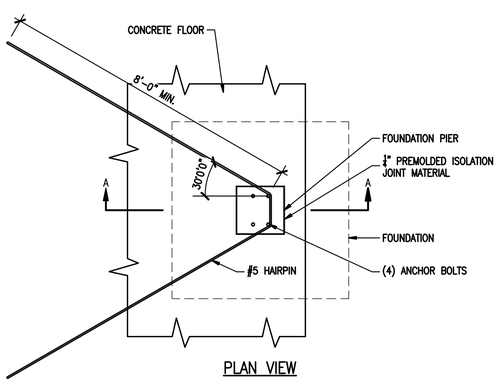

PLAN VIEW

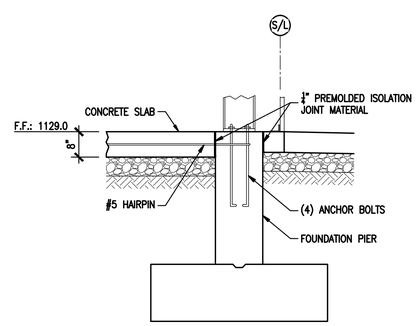

SECTION A-A

TYPICAL FOUNDATION WITH HAIRPIN DETAIL
SCALE: 1/2"=1'-0"

FOUNDATION NOTE:
FINAL FOUNDATION DIMENSIONS & ANCHOR BOLT LAYOUT TO BE GIVEN BY ENGINEER AFTER SUBMITTAL OF BUILDING COLUMN REACTIONS FROM METAL BUILDING SUPPLIER HAVE BEEN APPROVED. CONTRACTOR WILL THEN BE ALLOWED TO PROCEED WITH FOUNDATION CONSTRUCTION.

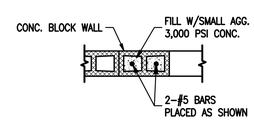

NOTE:
TYPICAL BOTH SIDES OF ALL BLOCK WALL OPENINGS. ALL REMAINING BLOCK WALLS TO BE GROUTED AT 32" O.C.

BLOCK WALL OPENING REINFORCEMENT
SCALE: 1/2"=1'-0"

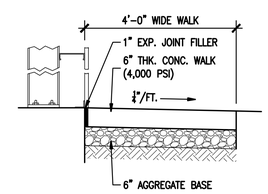

NOTES:
- WALK TO BE DIVIDED INTO SPACED BLOCKS AT APPROXIMATELY 5'-0" INTERVALS.
- 1" THICK EXPANSION JOINT FILLER SHALL BE INSTALLED BETWEEN WALK AND ANY FIXED STRUCTURE, EXTENDING THE FULL DEPTH OF THE SIDEWALK.
- APPLY 2 COATS OF ANTI-SPALLING COMPOUND, 3 WEEKS AFTER CONCRETE IS POURED. INSTALL PER MFG. RECOMMENDATIONS, ALLOWING PROPER DRYING TIME BETWEEN COATS.
- THIS DETAIL APPLIES TO ALL WALKS AND PADS DIRECTLY ADJACENT TO THE BUILDING, SEE THE SIDEWALK DETAIL INCLUDED ON THE SITE DETAILS SHEET FOR ALL OTHER WALKS.

SIDEWALK DETAIL
SCALE: 1/2"=1'-0"

CALCULATED	CHECKED
TM/JS	JS

REV. NO.	DATE
002	04/25/14

GGI inc. consulting engineers
3250 Corte Marina, Suite 1
Ph: 440.835.1501
www.ggiengineers.com

WASTEWATER TREATMENT PLANT IMPROVEMENTS - PHASE I
BUILDING PLAN - STRUCTURAL DETAILS

VILLAGE OF CRESTLINE

DOOR SCHEDULE

#	DOOR DATA WIDTH	HEIGHT	THICK.	MATERIAL	TYPE	WALL CONDITION	FRAME DATA MATERIAL	DEPTH	REMARKS
1	3'-0"	6'-8"	1-3/4"	FIBERGLASS	A		FIBERGLASS	5"	–
2	3'-0"	6'-8"	1-3/4"	FIBERGLASS	A	H-1, J-1	FIBERGLASS	5"	–
3	3'-0"	6'-8"	1-3/4"	FIBERGLASS	A		FIBERGLASS	5"	–
4	12'-2"	14'-0"		STEEL	B		STEEL		–
5	12'-2"	14'-0"		STEEL	B		STEEL		–
6	6'-0"	10'-0"		STEEL	C		STEEL		–

NOTES:
- DOOR HARDWARE SHALL CONSISTE OF A KEYED LEVER LOCK DESIGN THAT IS ADA COMPLIANT. THIS HARDWARE SHALL BE CERTIFIED ANSI A156.2, 1989, SERIES 4000, GRADE 2. USE STANDARD SCHLAGE AL-SERIES OR APPROVED EQUAL.
- ALL MEANS OF EGRESS DOORS SHALL BE READILY OPENABLE FROM THE SIDE FROM WHICH EGRESS IS TO BE MADE WITHOUT THE USE OF A KEY, SPECIAL KNOWLEDGE OR EFFORT.
- ALL NON-FIRE RESISTANCE RATED GLASS IN DOORS SHALL BE SAFETY GLAZED.

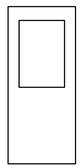

HALF-LITE
TYPE (A)

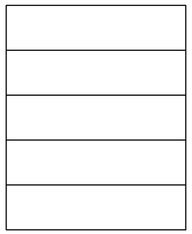

INSULATED OVERHEAD DOOR
TYPE (B)

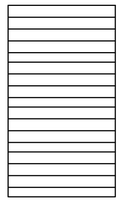

MANUAL ROLL-UP DOOR
TYPE (C)

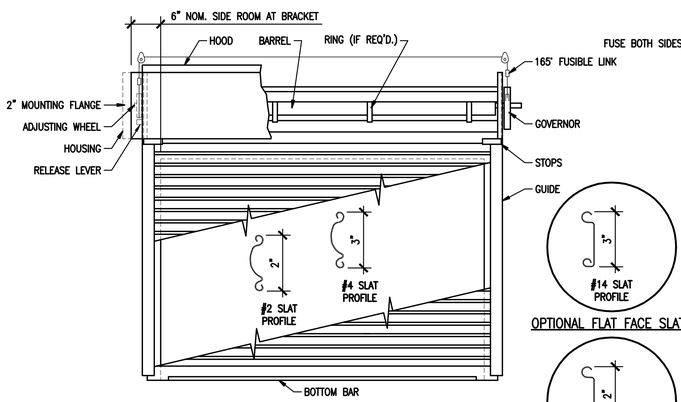

COILSIDE ELEVATION
RIGHT HAND OPERATED DOOR SHOWN
LEFT HAND OPERATED DOOR OPPOSITE

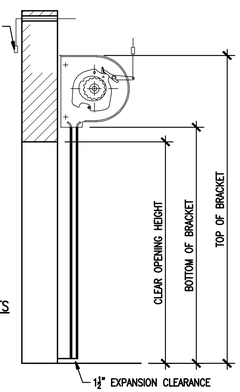

VERTICAL SECTION

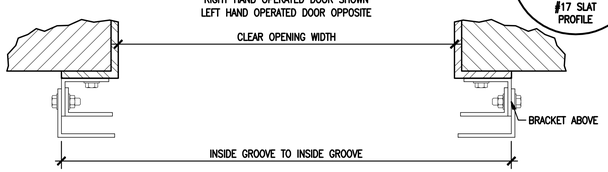

GUIDE SECTION

U.L. & F.M. RATING
IT.01 : U.L. 3 HOUR LABEL
IT.01 : FM NOT REQUIRED

ROLL-UP DOOR DETAIL TYPE H-7
NOT TO SCALE

WINDOW SCHEDULE

#	SIZE WIDTH	HEIGHT	FRAME MATERIAL	TYPE	LINTEL
1	4'-0"	3'-0"	ALUMINUM	A	2L 3-1/2" X 3-1/2" X 5/16"
2	4'-0"	3'-0"	ALUMINUM	B	2L 3-1/2" X 3-1/2" X 5/16"
3	4'-0"	3'-0"	ALUMINUM	A	

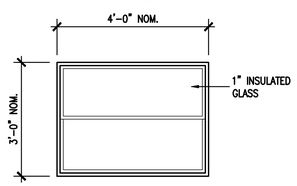

"WEATHER SHIELD" CLAD DOUBLE HUNG WINDOW.
MODEL NO 3040 OR EQUAL. VERIFY ROUGH OPENING DIMENSION BEFORE CONSTRUCTION

WINDOW TYPE A
SCALE: 1/2"=1'-0"

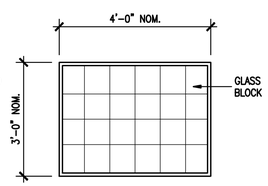

WINDOW TYPE B
SCALE: 1/2"=1'-0"

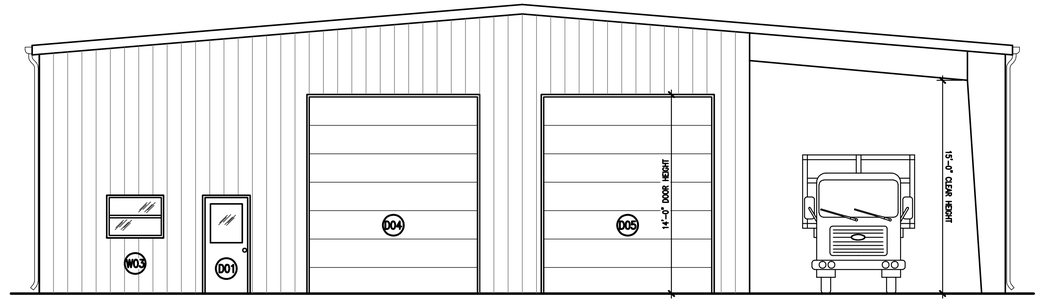

SOUTH ELEVATION
SCALE: 3/16" = 1'-0"

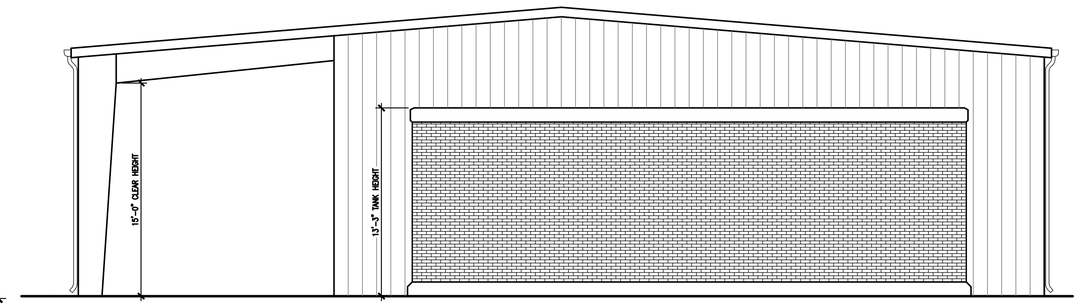

NORTH ELEVATION
SCALE: 3/16" = 1'-0"

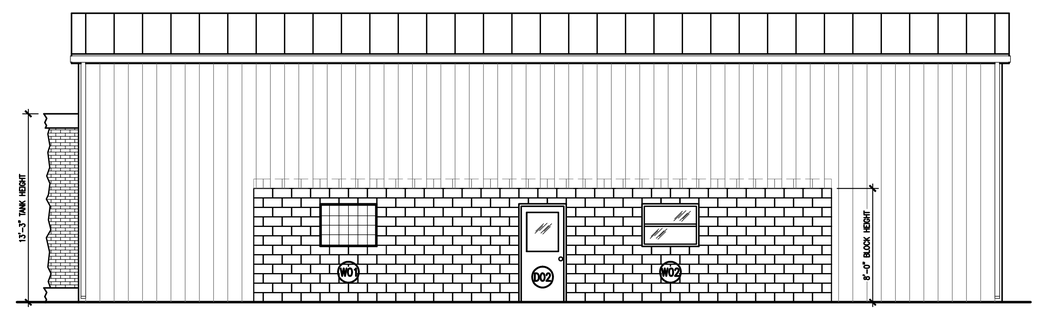

WEST ELEVATION
SCALE: 3/16" = 1'-0"

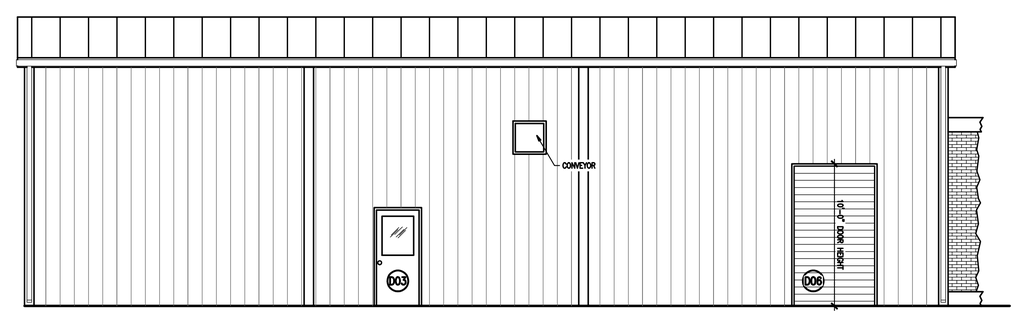

EAST ELEVATION
SCALE: 3/16" = 1'-0"

REV. NO.	DATE	CALCULATED	CHECKED
002	04/25/14	TM/JS	JS

GAI consulting engineers
3200 Corporate Pkwy. Aurora, IL 60502
Ph: 630.851.7337 Fax: 630.851.0350
www.gaiconsultants.com

WASTEWATER TREATMENT PLANT IMPROVEMENTS - PHASE I
BUILDING ELEVATIONS

VILLAGE OF CRESTLINE